NIKKO+ 21 LA

Performance Lighting





Surface-mount doorway and hallway lights and post mount series. Fixtures consist of:

- Multi-step powder-coat painting process, optimized against UV rays and corrosion.
- Copper-free die-cast aluminum housing, ring, and faceplates.
- High transmittance, internally coated, soda-lime pressed glass diffuser, thermally and chemically quenched to strengthen the impact resistance and reduce the effect of rapid temperature changes.
- Custom molded, anti-aging gasket(s).
- Stainless steel external hardware.
- High-efficiency COB, combined with an optimized passive cooling system, provides a long LED life.
- 100% uniform diffused light emission.
- Input voltage: 120-277 V (50 / 60 Hz), integral driver.
- Consult factory for dimming options, custom finishes (please specify RAL color), and non-cataloged CCT (Kelvin) options including static colors.
- Wall bracket and post accessories available (ordered separately).
- 5-year warranty on components.
- 10-year warranty on glass.
- Marine Grade finish.
- Suitable for Natatorium applications.

IP 65 · cULus LISTED · RAL · IK 05 0.7J

FINISHES

- AN-96 / Iron gray / Textured
- RB-10 / Iron rust / Textured
- GR-94 / Aluminum metallic / Textured
- WH-87 / White / Textured
- BK-81 / Black / Textured

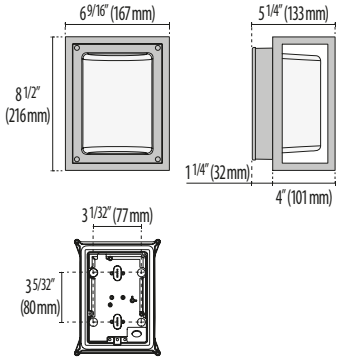

NIKKO+ 21 LA

Lumen Output	27K	3K	35K	4K	5K
Nikko+21 LA	695	712	729	746	763

11W Max Wattage

Scan here for installation instructions

Performance in Lighting reserves the rights to make all necessary changes without prior notice.

Performance in Lighting - 2621 Keys Pointe - Conyers, Georgia 30013 - USA - voice 770.822.2115 - info.usa@pil.lighting
www.performanceinlighting.com

Rev. 09/07/2026

Order Guide - NIKKO+ 21 LA

Order code example	N21L-OP-24W-3K-AM-UNV-010V-REM

Series	Wattage	CCT	Finish	Voltage	Dimming	Options/ Accessories
N21L Nikko+ 21 LA	**LED** 11 Watt LED (max) **XX** Specify Wattage must be below max **INC** 60W INC Edison Lamp (Lamp by others)	80 CRI std. LED Only **27K** 2700k **3K** 3000k **35K** 3500k **4K** 4000k **5K** 5000k **65K** 6500k **RED** Static Red **BLU** Static Blue **GRN** Static Green **RGBW*** RGBW *See below for details	**AM** Aluminum Metallic **IG** Iron Gray **IR** Iron Rust **BK** Textured Black **WH** Textured White **CC** Custom Color	**UNV** 120-277V	LED Only **010V** 0-10V Dimming Driver **ELV** 120V Line-Voltage Dimming Driver	**REM** Remote mounted emergency battery back-up **CLEAR** Clear glass INC version only **WB** Wall bracket (Not required for standard wall mounting) **P7** 7.8" Post **P22** 22.95" Post **P32** 32.79" Post

CONSULT FACTORY FOR OTHER AVAILABLE OPTIONS NOT SHOWN ABOVE

Performance in Lighting reserves the rights to make all necessary changes without prior notice.
Performance in Lighting - 2621 Keys Pointe - Conyers, Georgia 30013 - USA - voice 770.822.2115 - info.usa@pil.lighting
www.performanceinlighting.com

Rev. 09/07/2026

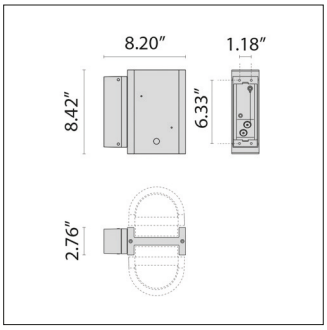

WB Wall Bracket

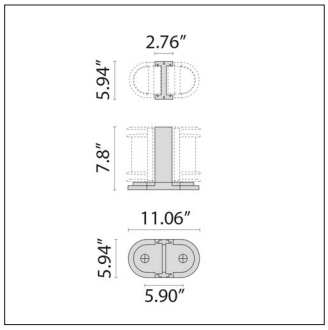

P7 7.8" Post

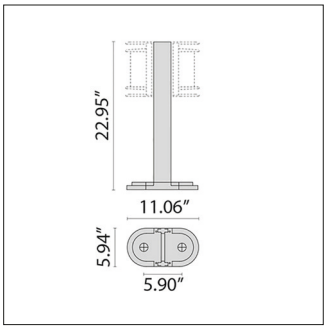

P22 22.95" Post

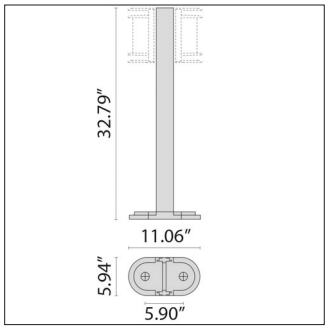

P32 32.79" Post



Clear glass 60W INC version only

Note: Wall brackets and posts are suitable for one or two fixtures each.

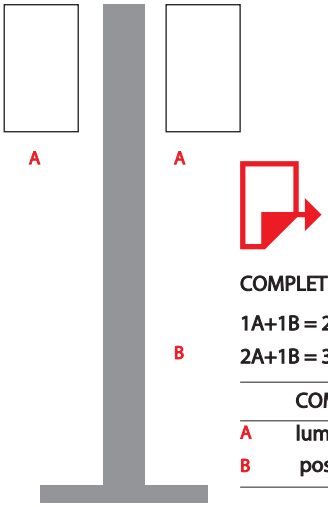

COMPLETE UNIT

1A+1B = 2 codes

2A+1B = 3 codes

	COMPONENTS
A	luminaire
B	post

Power Supply



17433
Kit driver 48V



17096
Kit driver 48V WP

RF Controls



3104173
RGBW RF controller 4 channel
(0.35A each CH)



31041730
RGBW RF controller WP 4 channel
(0.35A each CH)



310429
RGBW hand held remote

DMX Controls



178973
RGBW DMX enabler/decoder
4 channel (0.35A each CH)



1789730
RGBW DMX enabler/decoder WP
4 channel (0.35A each CH)



11015
Terminating Resistor



110150
Terminating Resistor WP